Voltage Controlled Temperature Compensated Crystal Oscillators VCTCXO, VM572T Series, CMOS Output, 32.768 KHz

MERCURY
Since 1973

Features:

- Suitable for non-battery operated real time clocks require 32.768 KHz reference frequency
- 5x7x2.3 mm ceramic SMD VCTCXOs with CMOS square wave output
- RoHS compliant

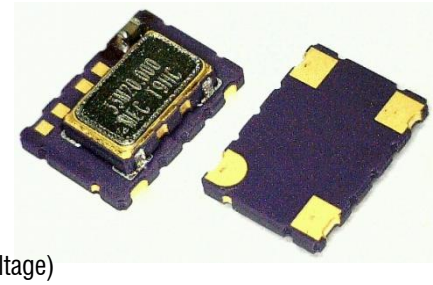

RoHS Compliant Product by Mercury

General Specifications (at+25°C and specified input voltage)

Product Series		**VM572T**				
Frequency		32.768 KHz				
Output Wave From		**Square** wave. Wave form code is "**T**"				
Initial Calibration Tolerance [1]		±2 ppm at +25°C and Vcon = +1.5 V D.C.				
Frequency Stability (ppm)		± 1 ppm	±1.5 ppm	±2.0 ppm	±2.5 ppm	√: Available □: Call us ✕: Not available
Temperature Range	**-10 to +60°C**	√	√	√	√	
	-20 to +70°C	√	√	√	√	
Standard ➔	**-30 to +75°C**	√	√	√	√	
	-40 to +85°C	✕	√	√	√	
Frequency Stability **vs Aging** **vs Voltage Change** **vs Load Change** **vs reflow**		 ±1.0 ppm max. first year at +25°C ±0.3 ppm max. for a ±5% input voltage change ±0.3 ppm max. for a ±10% loading condition change ±1 ppm max. 1 reflow and measured 24 hours afterwards				
Supply Voltage (V_{DD})		+2.8 V (voltage code is "**28**")	+3.0 V (voltage code is "**3**")	+3.3 V (voltage code is "**33**")	+5.0 V (voltage code is "**5**")	
Output Voltage Level Vdd=3.0V	**Logic "1"**	2.7 V min.				
	Logic "0"	0.3 V max.				
Rise Time and Fall Time		3 nano. sec. typ. 20% ↔ 80% of waveform				
Duty Cycle (Symmetry)		50%±10% measured at 50% waveform				
Start-up Time		2 m. sec. typ.				
Current Consumption		3.5 mA typ. at + 3.3V / 7 mA typ. at +5.0V				
Electronic Frequency Tuning on pad 1. (VCTCXO only)	**Frequency Deviation Range**	±10 ppm typical with Vcontrol centered at = +1.5 V and Vcontrol range of ±1.0 V				
	Slope Polarity	Positive: **Positive voltage for positive frequency shift**				
	Linearity	±10 % max.				
Output Load		15 pF				
SSB Phase Noise at +25°C	**Offset**	10 Hz	100 Hz	1 kHz	10 kHz	100 kHz
	Typical	-65 dBc/Hz	-100 dBc/Hz	-130 dBc/Hz	-150 dBc/Hz	-150 dBc/Hz
Storage Temperature		-50°C to +100°C				

[1]: Frequency stability over temperature will be from this measured initial frequency.

MERCURY www.mercury-crystal.com

Taiwan: TEL (886)-2-2406-2779, FAX (886)-2-2496-0769, e-mail: sales-tw@mercury-crystal.com
U.S.A.: TEL (1)-909-466-0427, FAX (1)-909-466-0762, e-mail: sales-us@mercury-crystal.com

Part Number Format and Example:

Part number example:	VM572T3-32.768K-2.5/-30+75						✍= Please specify	
	✍				✍		✍	
VM572T	3	—	**32.768K**	—	**2.5**	/	**-30+75**	
①	②		③		④		⑤	

①Product Series ②: Voltage code; Use"**28**" for +2.8 V; use "**3**" for +3.0 V; use "**33**" for +3.3 V; use "**5**" for +5.0 V ③: Frequency in KHz ④: Frequency stability ⑤: Operating Temperature range in °C

Environment Performance Specifications

Green Requirement	RoHS compliant, Pb (lead) free
Moisture Sensitivity Level	MSL=1 per IPC/JEDEC J-STD-020D.1
Humidity	85% RH, 85°C, 48 hours
Hermeticity	Leak rate $2x10^{-8}$ ATM-cm^3/sec max. Crystal part only.
Solderability	MIL-STD-202F method 208E
Vibration	MIL-STD-202F method 204, 35G, 50 to 2000 Hz
Shock	MIL-STD-202F method 213B, test condi. E, 1000GG ½ sine wave
Storage temp. range	-55 to +125°C
ESD Protection	2.5 KV min. Human body model.
Solder Pad Surface Finish	Gold (0.3~1.2 um) over nickel (1.27~8.89um)

Package Dimensions and Suggested Land Pattern: Unit: mm

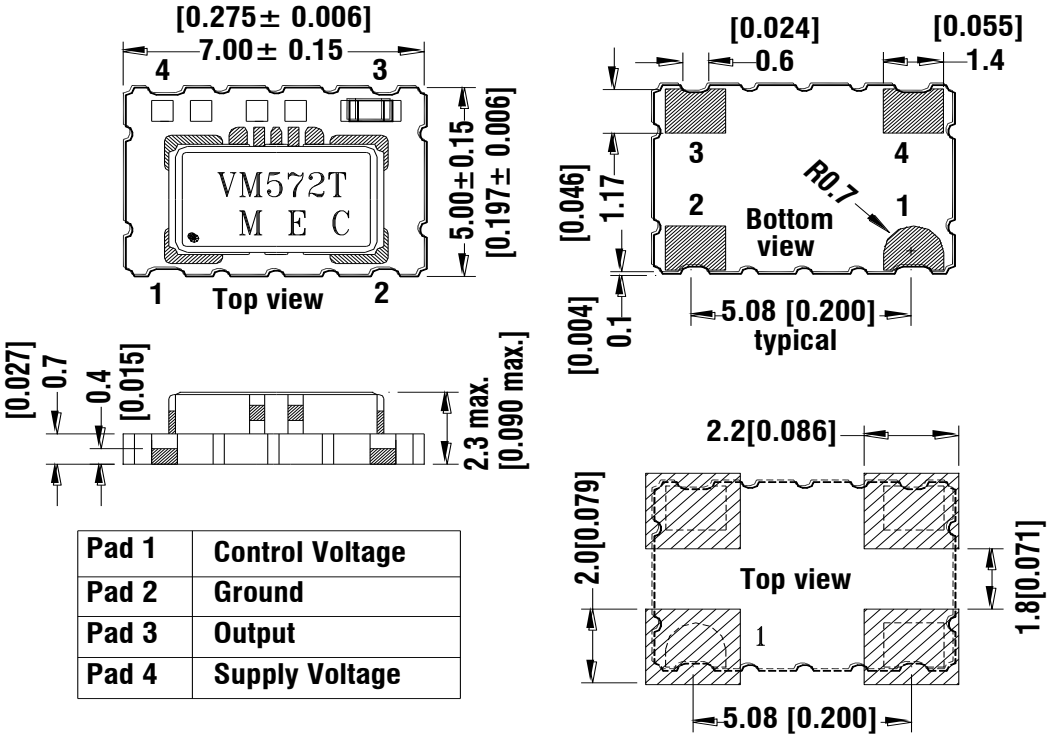

Pad 1	**Control Voltage**
Pad 2	**Ground**
Pad 3	**Output**
Pad 4	**Supply Voltage**

Rounded pad is pad No. 1. Count counter-clockwise when looking at top view.
Count clockwise when looking at bottom view. Decoupling capacitor is not built-in.

CMOS Square Wave VCTCXO Test Circuit and Waveform:

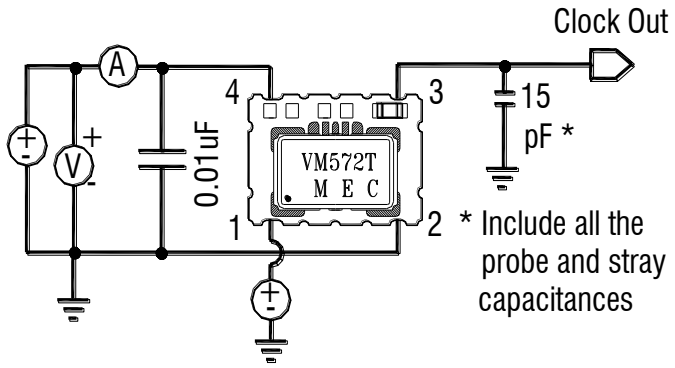

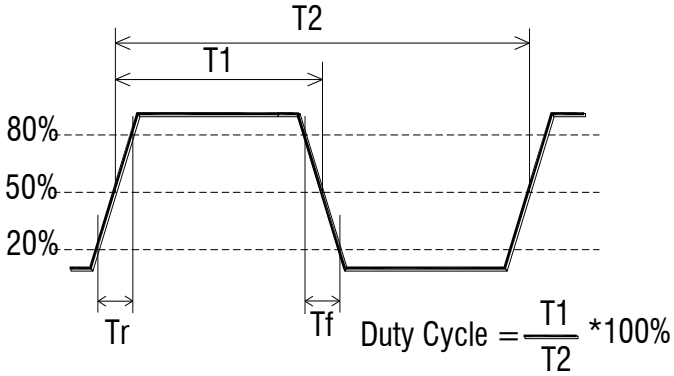

Recommended Reflow Soldering Profile

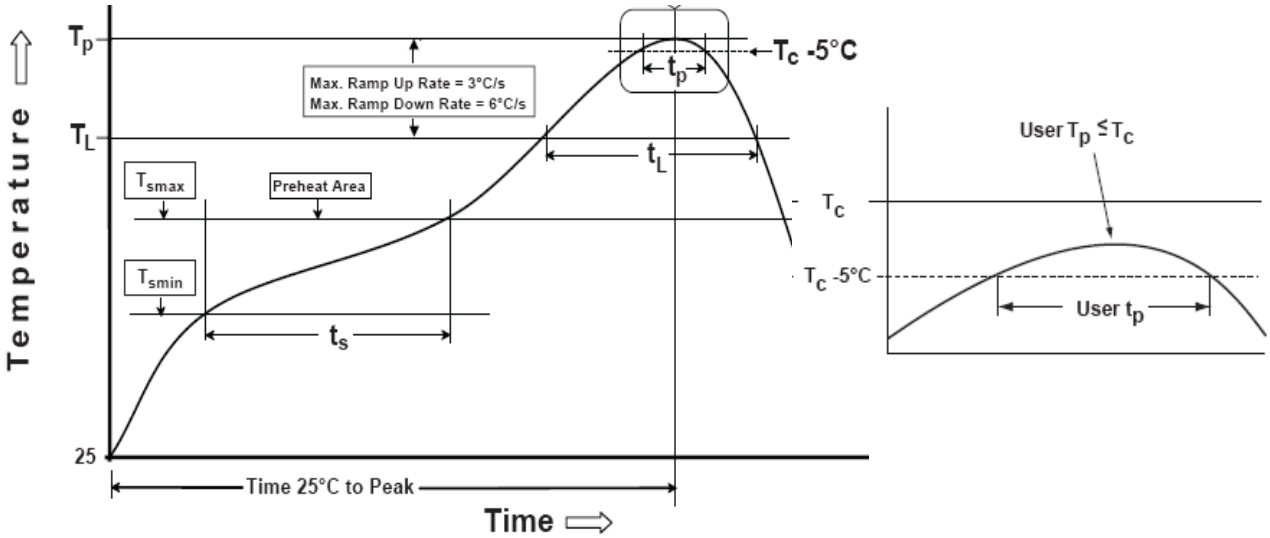

Profile Feature	Sn-Pb Eutectic Assembly	Pb-free Assembly
Preheat/Soak - Temperature min. (Ts min.) - Temperature max. (Ts max.) - Time (ts) (Ts min. to Ts max.)	 100ºC 150ºC 60 to 120 seconds	 150ºC 200ºC 60 to 180 seconds
Ramp-up rate (T_L to Tp)	3ºC / sec. max.	3ºC / sec. max.
Liquidous temperature (T_L) Time (t_L) maintained above T_L	183ºC 60 to 150 seconds	217ºC 60 to 150 seconds
Peak package body temperature (Tp)	235ºC	260ºC
Time (Tp) within 5ºC of the classification temperature Tc	10 to 30 seconds	20 to 40 seconds
Ramp-down rate (Tp to T_L)	6ºC / second max.	6ºC / second max.
Time 25ºC to peak temperature	6 minutes max.	8 minutes max.